MI mini connector

MI mini connector

400/30V 6/1A

Technical characteristics

Number of contacts	6+6(5+PE)
Rated current (40°C)	6A(power), 1A(signal)
Rated voltage	400V(power), 30V(signal)
Rated impulse voltage	4000V(power), 500V(signal)
Pollution degree	3
Contact resistance	⩽ 5 mΩ
Termination	crimp terminal
Wire gauge	MAX0.75mm^2
Degree of protection	IP67(Acc. to EN60529 for coupled connector)
Limiting temperature	-40°C ...+130°C
Flammability acc. to UL 94	V0
Contact plating	Au

Angeled double zone double cable shieled connector

Male, Shielded, Crimp terminal

Order crimp contacts separately

Contacts	Cable outlet	Designation	Order No.
6+6(5+PE)	7.5mm	MI-MC06/6-BK-OD2.7	173 012 310 4001

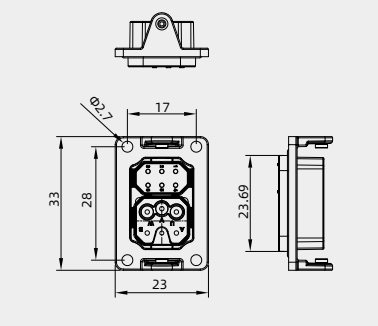

Female, Shielded, Crimp terminal

Order crimp contacts separately

Contacts	Cable outlet	Designation	Order No.
6+6(5+PE)	7.5mm	MI-FC06/6-SE-2D7.5-SH	173 012 520 2001

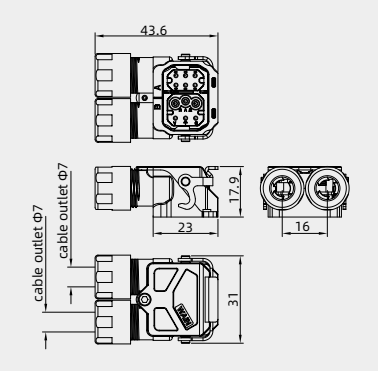

Crimp contacts

Crimp contacts

Contact resistance ≤ 3mΩ
gold plated

Wire gauge(mm^2)	Male	Order No.
0.09-0.25	MI-MC6G2-0.25	101 040 210 0101
0.13-0.52	MI-MC6G-0.38	101 040 210 3801
0.52-0.75	MI-MC6G-0.75	101 040 210 0601
Wire gauge(mm^2)	Female	Order No.
0.09-0.25	MI-FC6G2-0.25	101 040 220 0101
0.13-0.52	MI-FC6G-0.38	101 040 220 3801
0.52-0.75	MI-FC6G-0.75	101 040 220 0601

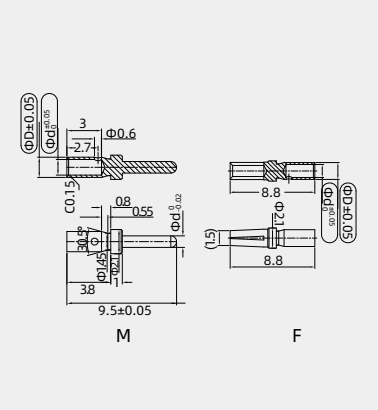

Tools

Crimping tool

Wire gauge	Designation	Order No.
0.09-0.82mm^2	TL03	198 001 001 0002

Notes: The tools for crimp terminal may influence the product quality and stability. Please select the tools recognized by our company.